REIDEN SWISS
HIGH PERFORMANCE MACHINE TOOLS

MACHINE TOOL MANUFACTURER

e

RX12

5- axis machining center
a system developed for high performance

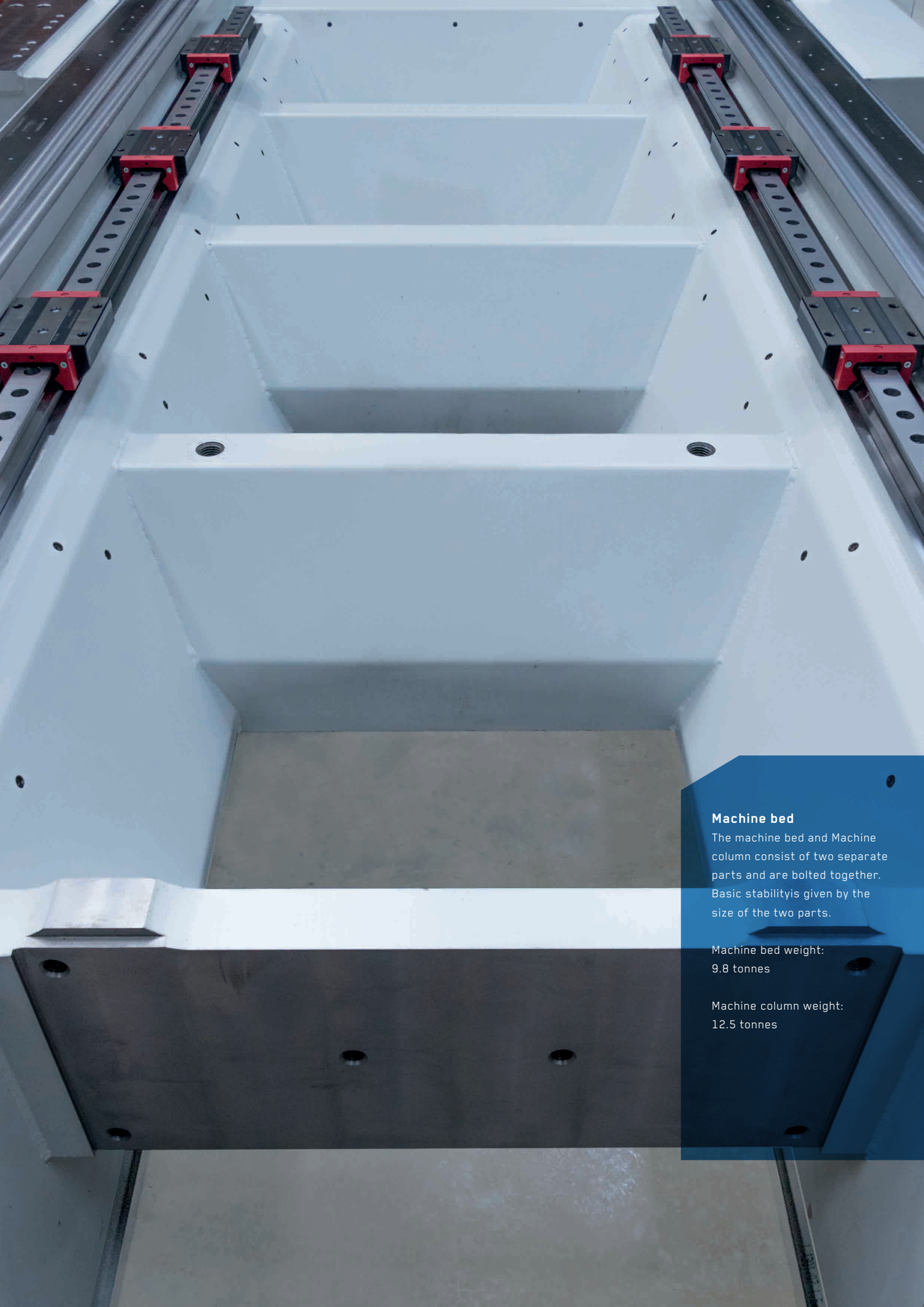

Machine bed

The machine bed and Machine column consist of two separate parts and are bolted together. Basic stabilityis given by the size of the two parts.

Machine bed weight:
9.8 tonnes

Machine column weight:
12.5 tonnes

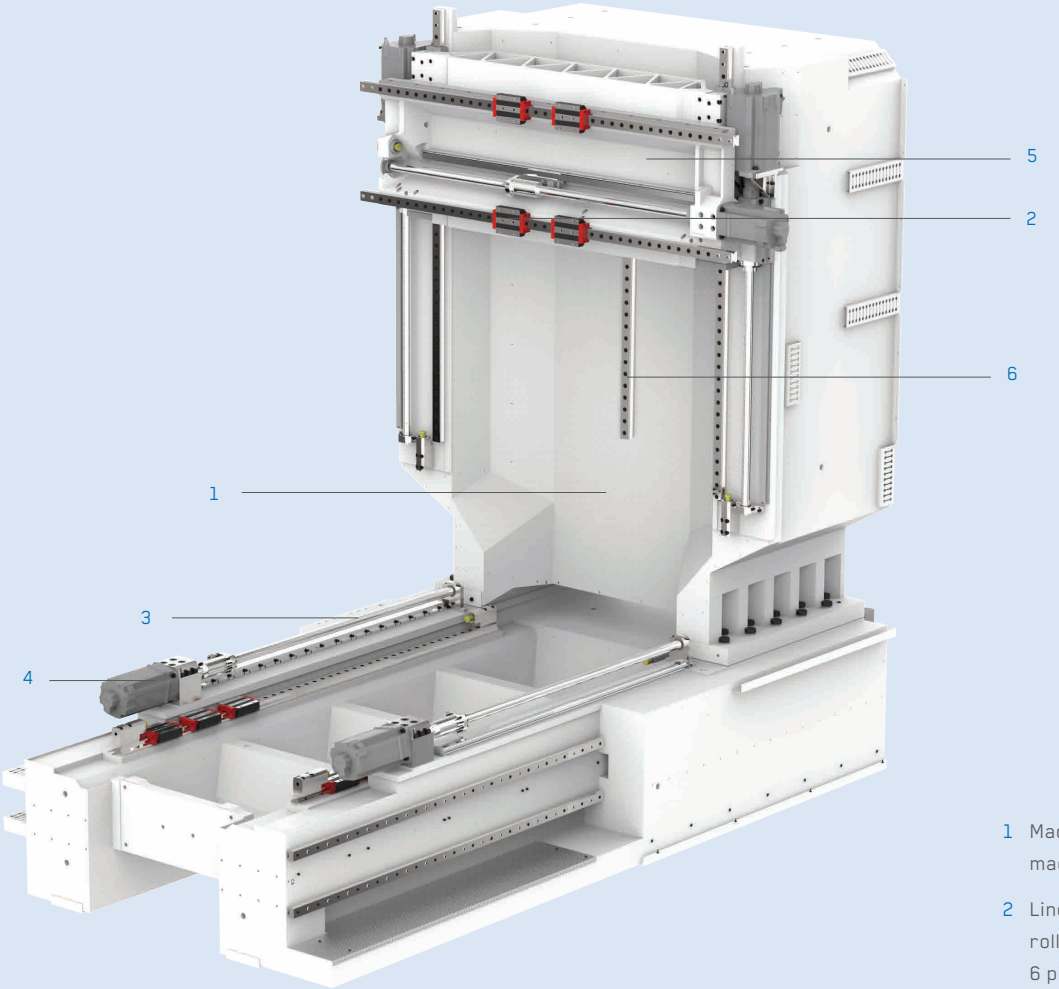

1 Machine bed and machine column made of HYDROPOL®

2 Linear guides with 4 pieces each roller shoes in X- and Z axis, 6 pieces in Y axis. The exceptionally wide guide distance has a positive effect on the stability of the machine.

3 Double-spindle drive in the Y- and Z axis. Each drive has its own measuring system (two for each axis) for optimum precision

4 Direct drive of the linear axes using the in-line concept

5 Strongly ribbed compound slide rests for maximum stability in milling and turning operation

6 Third linear guide in the Z axis for maximum stability

HYDROPOL® – VIBRATION-ABSORBING AND STABLE - FOR HIGH STANDARDS IN MACHINING

To meet the high standards in the mechanical industry, machine column and machine bed are made of HYDROPOL®, a composite material of steel and special concrete. Together they form a unit with enormous inherent stability, excellent vibration-absorbing behaviour and a high level of dynamic rigidity which has a positive effect on tool wear and surface quality.

The milling head – slim, compact and rigid

Its compact and slim design guarantees optimum accessibility to the workpiece to be machined. The drive is a backlash-free worm dirve and can thus counteract high machining forces.

NO LIMITS
IN UNIVERSALITY

The proven rotary head design guarantees a high level of universality for multi-sided machining and is designed for simultaneous milling operation with up to 5 axes. This key technology has been successfully used by Reiden Technik AG for years in different machine families.

Clear working area

Even with the milling head pivoted, the operator always has an optimum view of the tool and the workpiece. Workpieces up to ø 1,600 mm can be turned.

Vertical milling head position

In the vertical milling head position it is possible to drive up to the front flattened table edge and 450 mm behind the flattened table edge. In the vertical position the spindle can be driven up to 1,100 mm beyond the table surface.

Horizontal milling head position

In the horizontal spindle position the spindle can be driven 500 mm behind the flattened table edge. This allows work even with very long tools, e.g. deep-hole drilling.

A axis, infinitely programmable

The A-axis is infinitely pivotable from -1° to 90°. The NC axis is designed for positioning- and simultaneous operation.

HSK63 motor spindle

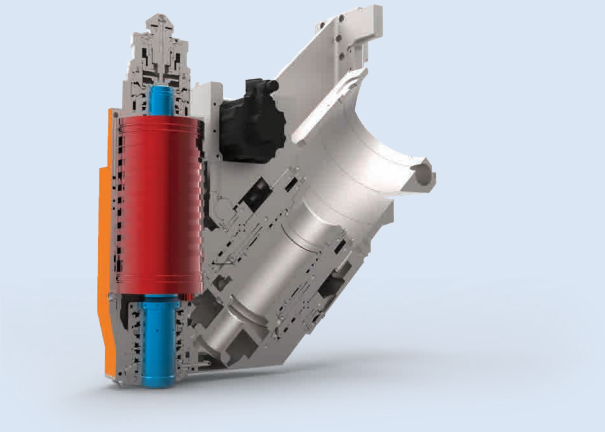

16,000 min^{-1}
105 / 135 Nm
38 kW

HSK63 DDT Double Drive Technology

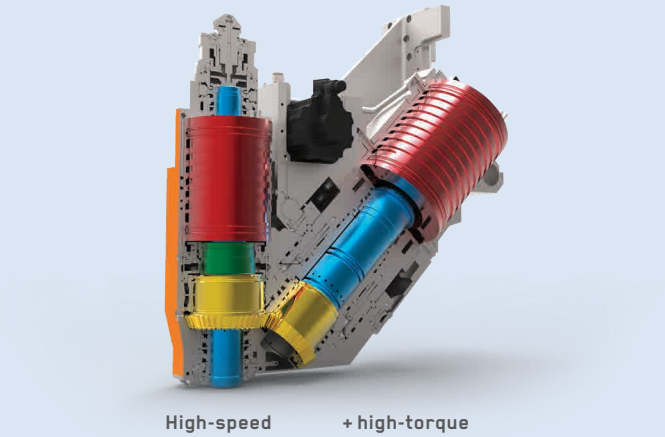

High-speed	+ high-torque
18,000 min^{-1}	3,000 min^{-1}
63 / 83 Nm	226 / 291 Nm
28 kW	21 / 27 kW

Performance diagram

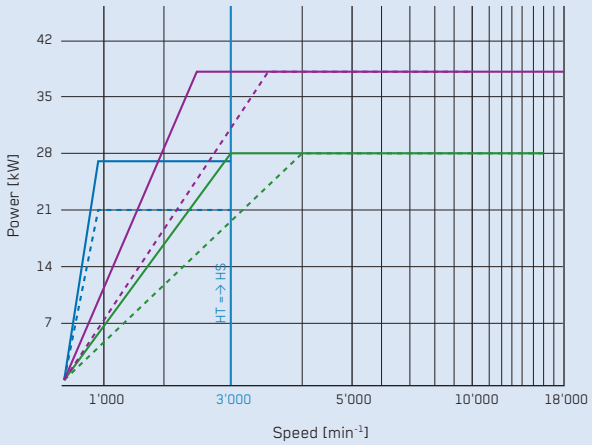

Torque diagram

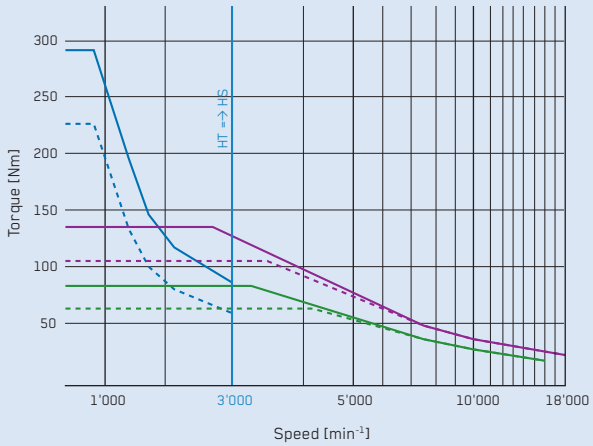

High Torque DDT 291 Nm 40% ED (27 kW)
High Torque DDT 226 Nm 100% ED (21 kW)
High Speed DDT 83 Nm 40% ED (28 kW)
High Speed DDT 63 Nm 100% ED (28 kW)
High Speed 135 Nm 40% ED (38 kW)
High Speed 105 Nm 100% ED (38 kW)

DDT – DOUBLE DRIVE TECHNOLOGY

UNIQUE AND PATENTED

The RX12 is supplied as standard with a motor spindle version with 16,000 min^{-1} and a maximum torque of 135 Nm. The DDT double-drive design patented by Reiden Technik AG is offered as an option.

This version reaches up a maximum torque of 291 Nm via the high-torque motor at up to 3,000 min^{-1}. Above 3,000 min^{-1} the high-torque motor is disengaged and a maximum rpm of 18,000 min^{-1} reached via the built-in motor spindle in the head. At the same time the built-in spindle displacement sensor measures the effective deviation in real time. So heat-conditioned expansion of the spindles can be reduced to practically zero.

HSK100 motor spindle

The standard version of the RX12 is fitted with a powerful motor spindle. The connection of the housing and the motor spindles to the recirculation cooling and the spindle expansion sensor fitted as standard guarantee the highest degree of precision on the workpiece.

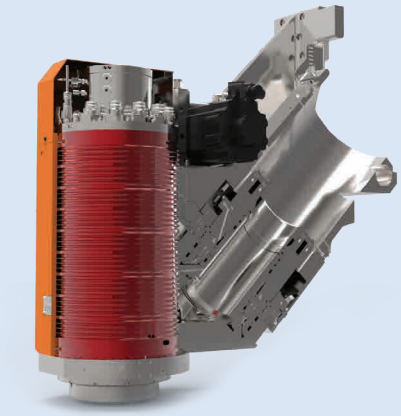

12,000 min^{-1}
300 / 452 Nm
74 / 84 kW

Performance diagram

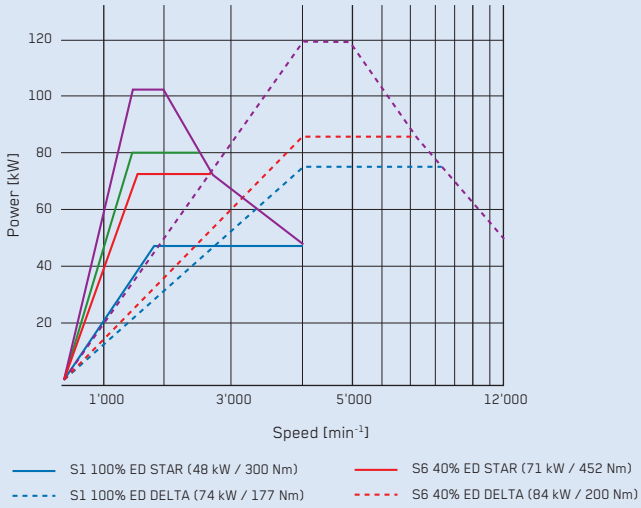

Torque diagram

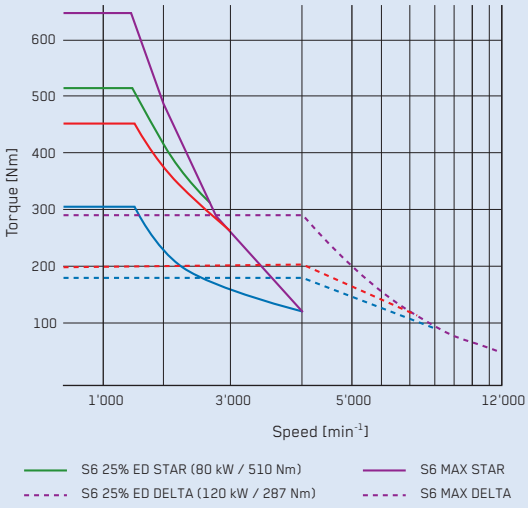

Process diagram

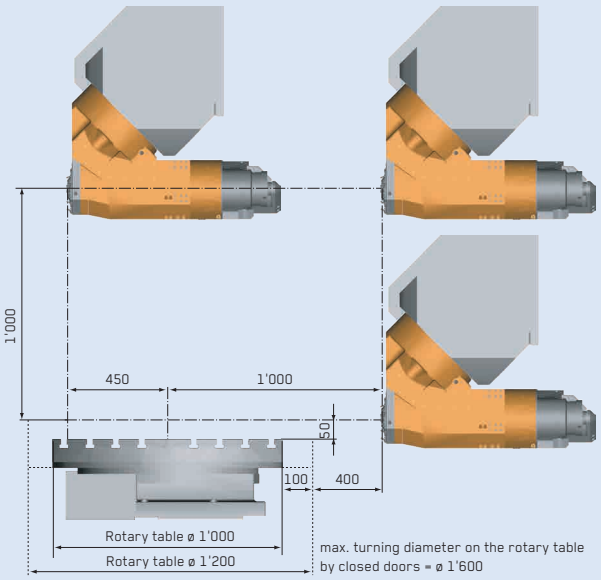

Horizontal

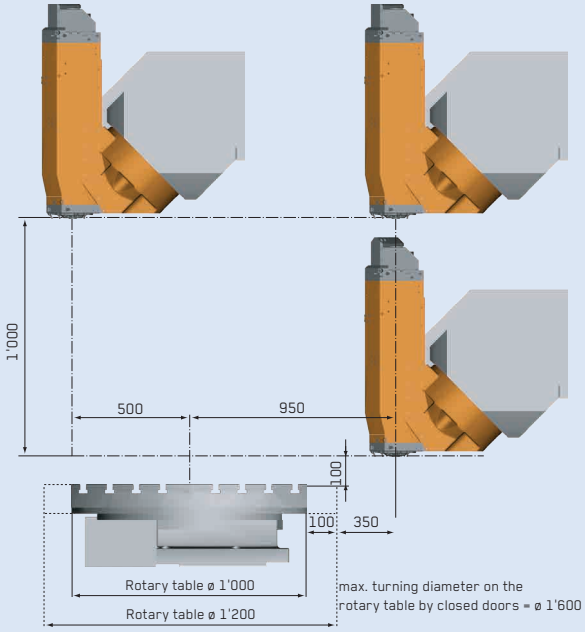

Vertical

Additional stability

The HSK100-T version of the milling head masters even high machining forces with flying colours. The hydraulic spindle clamping provides an optimum grip of the tool in turning operation.

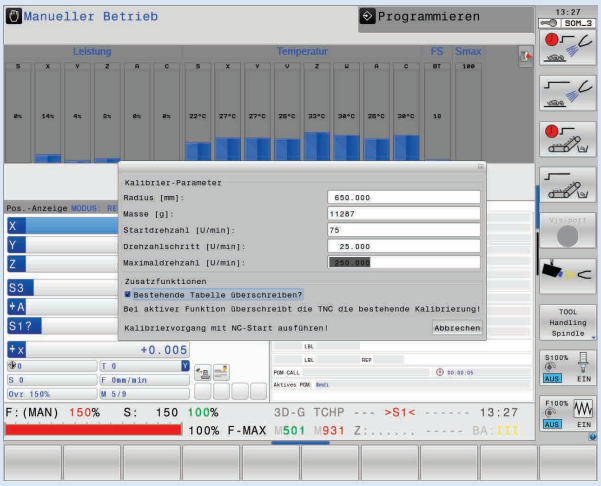

Automatic balancing of workpieces

The direct-drive circular table has automatic imbalance detection. The CNC controller specifies where the imbalance is situated on the circular table. With the help of counterweights, low-vibration working is ensured even at maximum speed.

Plenty of room for individuality

Star-shaped T-Slots offer the best possible prerequisites for chucking round components. The table surface can however also be individually adjusted to your requirements, e.g. with factory readying for jaw boxes.

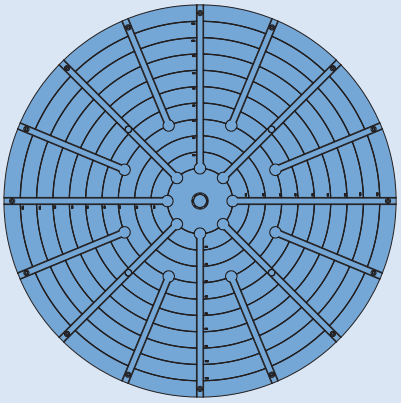

Circular table with star-shaped T-Slots

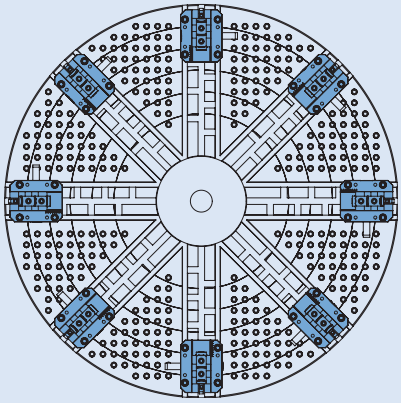

Circular table with bread-board and jaw boxes

MILLING AND TURNING
IN ONE CHUCK OPERATION

Workpieces no longer need to be converted between milling- and turning operations. Thus cost-intensive changeover procedures can be reduced to a minimum. This also has a very positive effect on the finished workpiece. Ideally even the investment in a large lathe can be saved thanks to this technology on the milling machine.

Loading methods

The quick and efficient loading and unloading of workpieces is via a large loading opening. In the process up to 5 workpieces can be loaded or unloaded at the same time. The control system uses sensors to check the correct insertion of the workpieces so that incorrect manipulation can be detected.

HSK100 tool magazine

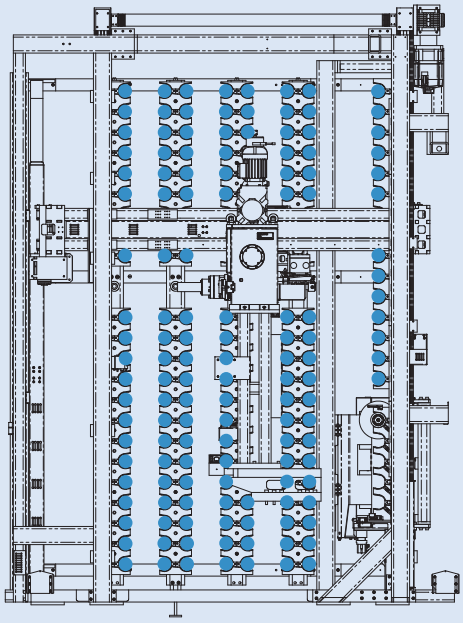

HSK63 / SK40 tool magazine

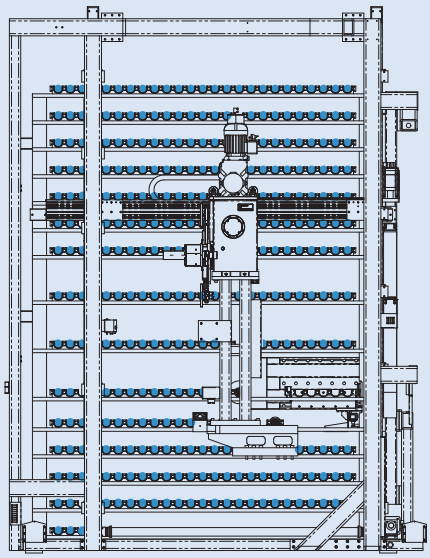

Tool exchanger

The tool magazine is arranged laterally to the working area. The tool is set up via 2 independent NC axes and substituted using a double tool gripper. Regardless of which magazine is installed, the installation space always remains equally small.

HSK63 / SK40: 85 / 185 / 260 / 360 tool places
HSK100: 65* / 103 / 191 / 272 tool places

* version with chain magazine

TOOL HANDLING
QUICK, SAVE AND EASY TO HANDLE

The tools can be loaded or unloaded at the back of the machine quickly and in parallel with live operation. A touch panel allows the operator easy handling and assists him in managing the tools. Using defined tool types the control system autonomously identifies free spaces and blocks adjacent spaces for large tools. A chip system that automatically transmits tool data to the control system is optionally available.

Pallet base table

The palette table is clamped to the palette base table over 4 zero-point clamping systems. In doing so a repeat accuracy of 0.01 mm guaranteed every time.

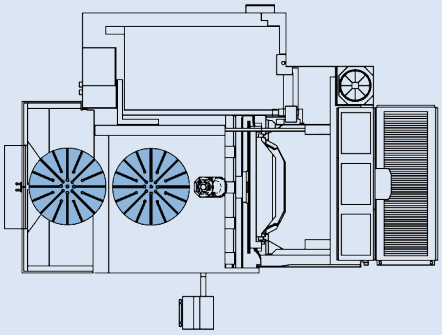

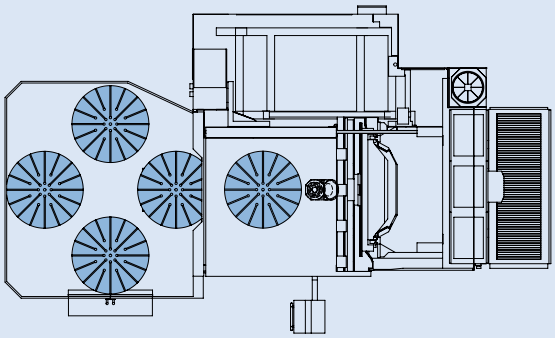

Small installation space - large benefit.
The automatic palette changer

The installation space of the 2-way palette changer is a very compact and space-saving design, with 1,300 mm additional machine length.

The lateral arrangement always guarantees the operator when entering the program an optimal view of the workpiece being worked on. The 2-way and 5-way palette changer are very easy and user-friendly to programme at the controls and do not require any additional software.

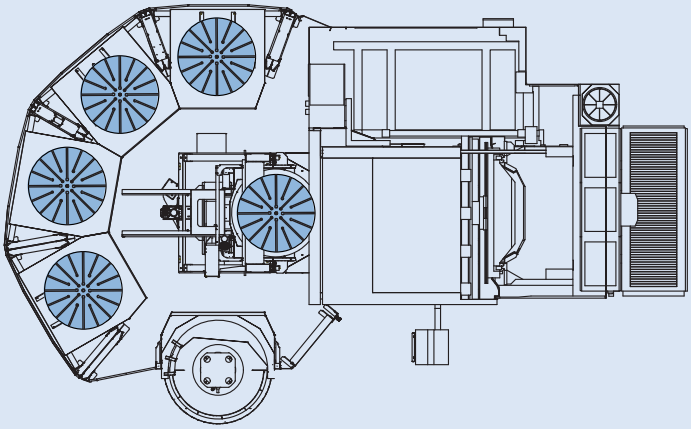

REIDEN RX12 PCS (Pallet Changing System)

Pallet size	mm	Ø 1,200 x 1,000 / Ø 1,200
Max. Load weight	kg	2,000
Number of palettes		2 / 5 / 9
Optional		Linear storage
Max. Interference circuit for 2-fold / 5-fold palette changer	mm	Ø 1,200

MODULAR AUTOMATION CONCEPT
IN A SMALL SPACE

Chucking and fitting during live operation Thanks to the inspired automation concept, downtimes can be reduced to a minimum. The RX12 can be fitted in various configurations up to the linear storage. Access to the machining area remains optimum thanks to the laterally arranged palette changer. Crane loading into the working area is also still possible.

Even in its basic version the Reiden RX12 is equipped with innovative technology for economic complete machining.

	Basic configuration	Additional equipment
Control and operation		
Controls	Heidenhain TNC640	Siemens 840D sl
Portable electronic handwheel	●	
2 sets of operating- and programming instructions (inc. wiring diagram)	●	
Drive and spindle		
HSK 63 rpm range	16,000 min^{-1}, 135 Nm	DDT 18,000 min^{-1},291 Nm
HSK 100 rpm range	12,000 min^{-1}, 452 Nm	
Automatic swivel head	●	
Milling head cooling system	●	
Sealing air isolation system in milling head	●	
C axis (infinitely variable) with screw drive	●	
C axis (infinitely variable) with direct drive		●
Turning software expansion		●
A axis -0° bis 90° (infinitely variable)	●	
Air blast through spindle centre		●
Minimal quantity lubrication system		●
Working area		
Full space protection casing, inner area made of chromium steel	●	
Automatic opening and closing of work doors	●	
Machine internal light	●	
Mineral glass panel	●	
1 angled door for crane loading	●	
Periphery		
Cone cleaning station		●
HSK63 tool changer, number of spaces	85 (shelf magazine)	185 / 260 / 360 (shelf magazine)
HSK100 tool changer, number of spaces	65 (chain magazine)	103 / 191 / 272 (shelf magazine)
Chip conveyor, central, longitudinal to machine bed	●	
Spray gun with sep. Coolant pump	●	
Internal coolant supply, type A	30 bar	50 / 80 bar
Pressure regulation, internal coolant supply		●
Coolant recooling		●
High-performance paper band filter	●	
Rotating viewing glass		●
Smoke and mist extractor		●
3D wireless measuring sensor		●
Laser tool setting and monitoring		●
Camera in working area		●
Pallet changing system		2- / 5- / 9-fold
Colouring	Light grey RAL7035 / violet blue RAL5000	upon request

Features / technical data

Technical data

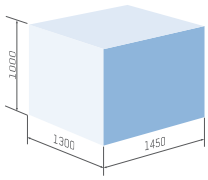

Working range		
X axis (longitudinal axis)	mm	1,300
Y-axis (transverse axis)	mm	1,450
Z axis (vertical axis)	mm	1,000
C axis (circular table)	mm	ø 1,200 x 1,000 / ø 1,200
Max. Oscillating circle diameter	mm	ø 1,500 (ø 1,600)
Max. Table load	kg	2,500 / 2,000 with palette changer
Main drive		
Spindle power 12,000	kW	74 kW at 100% ED / 84 kW at 40% ED (HSK100)
Spindle power 16,000	kW	38 kW at 100% ED / 38 kW at 40% ED (HSK63)
Spindle power 3,000 DDT	kW	21 kW at 100% ED / 27 kW at 40% ED (HSK63 / SK40)
Spindle power 18,000 DDT	kW	28 kW at 100% ED / 28 kW at 40% ED (HSK63 / SK40)
Max. Torque, spindle 12,000 40% ED	Nm	452
Max. Torque, spindle 16,000 40% ED	Nm	135
Max. Torque, spindle 3,000 40% ED	Nm	291
Max. Torque, spindle 18,000 40% ED	Nm	83
Feed motor		
Rapid feed speed X / Y / Z axis	m/min	50
Tool exchanger		
Magazine spaces HSK100		65 / 103 / 191 / 272
Magazine spaces, HSK63 / SK40		85 / 185 / 260 / 360
Max. Tool length	mm	600
Max. Tool diameter	mm	125 / 250 (at HSK100) 80 / 160 (at HSK63 / SK40)
Machine data		
Machine weight	kg	approx. 27,000 (depending on version)
Dimensions, length × width × height	mm	5,665 x 4,562 x 4,153

Subject to technical modification.

Guaranteed accuracies DIN VDI/DGQ 3441

Accuracy depends heavily on external thermal influences. The values given are reached in the temperature region of 20° +/- 2° during factory approval.

Linear axes X, Y, Z		**Rotary table C-axis**	
Position error P	6 µm	Positional uncertainty P	5 ws
Position deviation P	3 µm	Positional variance Pa	2 ws
Repeatability Ps_{mid}	3 µm	Positional scatter Ps_{mid}	2 ws
Repeatability Ps_{max}	4 µm	Positional scatter Ps_{max}	3 ws
Reversal error U_{mid}	1 µm	Reversal error U_{mid}	1 ws
Reversal error U_{max}	2 µm	Reversal error U_{max}	2 ws

RX12 dimensions

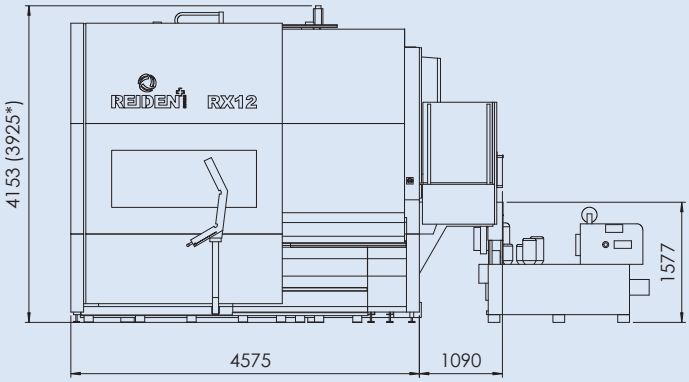

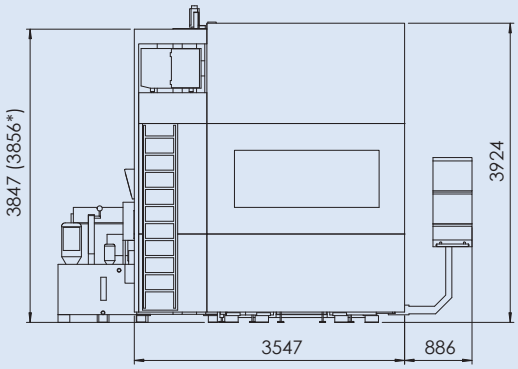

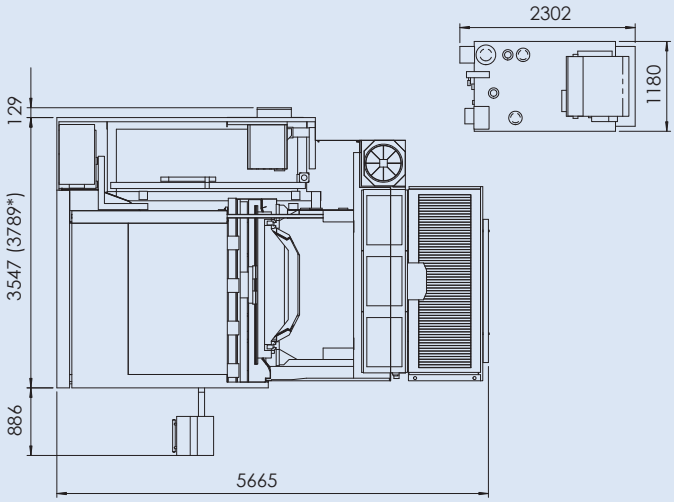

* Version with HSK100 /SK50

Reiden Technik AG
Machine tool manufacturer
Werkstrasse 2
CH-6260 Reiden

Phone +41 62 749 20 20
Fax +41 62 749 20 21
info@reiden.com

www.reiden.com